Intravitreal Injection Procedure Pack (9993D)

Images

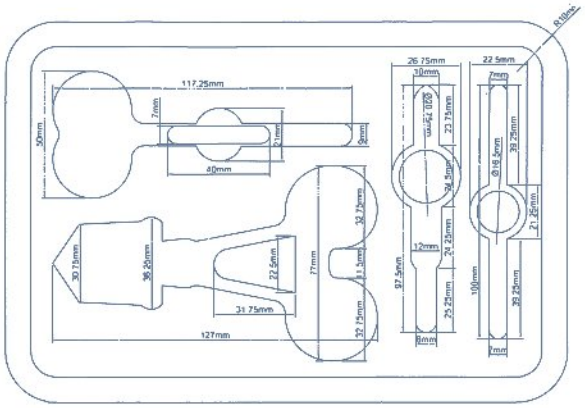

Specifications

Property	Value
Material	Plastic
Contents	Conjunctival Scissors (Bow), Lid Speculum, Swab Holder, St Martins Forceps, Braunstein Calliper
Components	Moulded Tray & Lid
Presentation	Sterile, Pouched & Boxed

Other Details

- This product can be viewed online at http://www.eyeline.org/products/view/intravitreal_pack.